December 2024
www.taegutec.com
1/12

NPN

New Product News

new

New Coolant Jet Channel Type CX Arbors

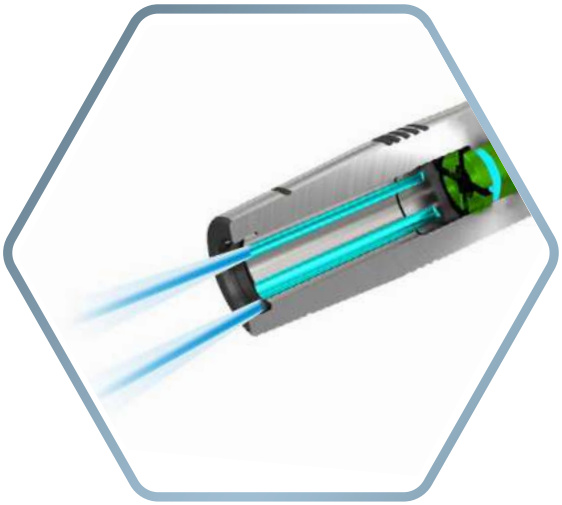

ADVANCE CUTTING
TaeguTec

TaeguTec
Member IMC Group

KEY POINT

TaeguTec introduces coolant jet channel technology CX arbors to its tooling system line.

TaeguTec's latest CX coolant-type arbors with channels along the shank bore, provide optimal cooling to the cutting edge for solid carbide tools without coolant holes. As a result, this allows for superior cooling performance directed towards the tool's cutting edge over external coolant systems.

CX arbor features

- Coolant jet channels along the shank bore
  - Only for use with internal coolant systems
  - Higher cooling efficiency in high-speed milling machining
  - The best cooling solution for solid carbide tools
- Coolant directed to the tool's cutting edges
  - Eliminates built-up edge
  - Effective chip evacuation prevents chip recutting
  - Prolonged tool life
  - Similar cooling performance as internal coolant arbor types
  - Good surface roughness after finishing machining
  - Excellent cooling effect when machining difficult-to-cut materials
- Available in various arbor types: DIN69871, HSK, BT, C-adapter, etc.
- Tool diameter range: Ø3-32 mm

Recommendations

- Low external coolant flow type CNC milling machines
- Milling in confined spaces
- Milling requiring good surface finish
- Machining for heat-resistant materials such as hard alloy steels

Tooling system product line with CX coolant type

SRKIN Thermal shrinking chucks	DIN69871-SRKIN-CX	HSK-SRKIN-CX	BT-SRKIN-CX	BT-FC-SRKIN-CX	C-SRKIN-CX
SRK Thermal shrinking chuck & collet	HSK-SRK-CX	ER-SRK-CX	Side lock end mill holders	BT-EM-CX	HSK-EM-CX

CX arbors dedicated preset screw

- Do not remove the preset screw as it enables coolant supply via the jet channels.
  (This screw is not required for certain product lines, including small diameter and side lock arbors).

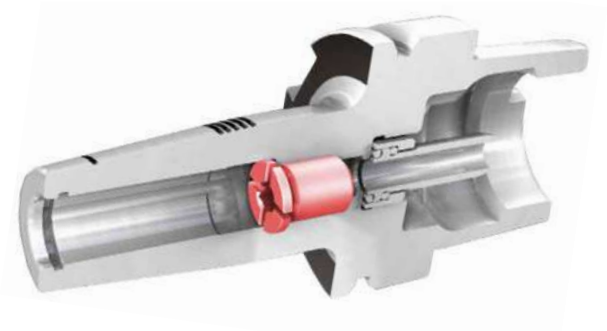

DIN69871-SRKIN-CX

CX coolant type thermal shrinking chucks

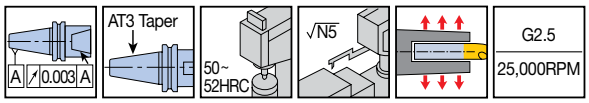

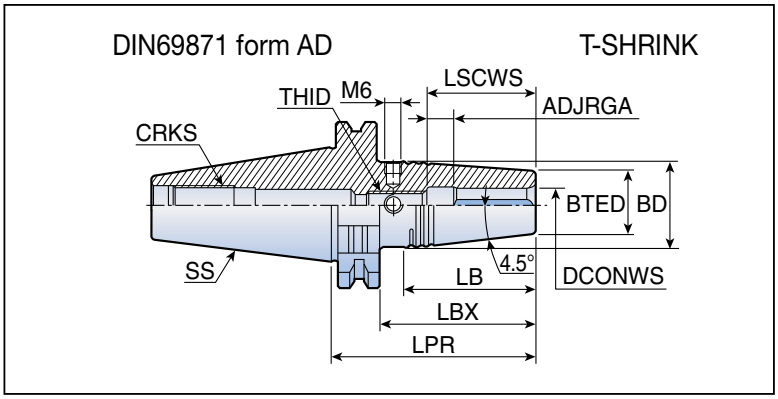

Designation		Dimension (mm)										
		SS	DCONWS	BTED	BD	LPR	LBX	LB	ADJRGA	LSCWS	CRKS	THID
DIN69871 40	**SRKIN 6X80 CX**	40	6	21	27	80	60.9	38	10	34	M16	M5
	SRKIN 8X80 CX	40	8	21	27	80	60.9	38	10	34	M16	M6
	SRKIN 10X80 CX	40	10	24	32	80	60.9	51	9	40	M16	M8
	SRKIN 12X80 CX	40	12	24	32	80	60.9	51	9	45	M16	M10
	SRKIN 14X80 CX	40	14	27	34	80	60.9	45	9	45	M16	M10
	SRKIN 16X80 CX	40	16	27	34	80	60.9	45	9	48	M16	M12
	SRKIN 20X80 CX	40	20	33	42	80	60.9	57	9	49	M16	M16
	SRKIN 25X100 CX	40	25	44	53	100	80.9	57	9	55	M16	M16
DIN69871 50	**SRKIN 6X80 CX(1)**	50	6	21	27	80	61	38	10	34	M24	M5
	SRKIN 8X80 CX(1)	50	8	21	27	80	60.9	38	10	34	M24	M6
	SRKIN 10X80 CX(1)	50	10	24	32	80	60.9	51	9	40	M24	M8
	SRKIN 12X80 CX(1)	50	12	24	32	80	60.9	51	9	45	M24	M10
	SRKIN 14X80 CX(1)	50	14	27	34	80	60.9	45	9	45	M24	M10
	SRKIN 16X80 CX(1)	50	16	27	34	80	60.9	45	9	48	M24	M12
	SRKIN 18X80 CX(1)	50	18	33	42	80	60.9	57	9	48	M24	M12
	SRKIN 20X80 CX(1)	50	20	33	42	80	60.9	57	9	49	M24	M16
	SRKIN 25X100 CX(1)	50	25	44	53	100	80.9	57	9	55	M24	M16
	SRKIN 32X100 CX(1)	50	32	44	53	100	80.9	57	9	59	M24	M16

- Only use inductive heating device for T-SHRINK holders
- (1) Balance to G2.5 at 20,000 RPM

HSK A-EM-CX

CX coolant type end mill holders

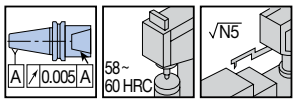

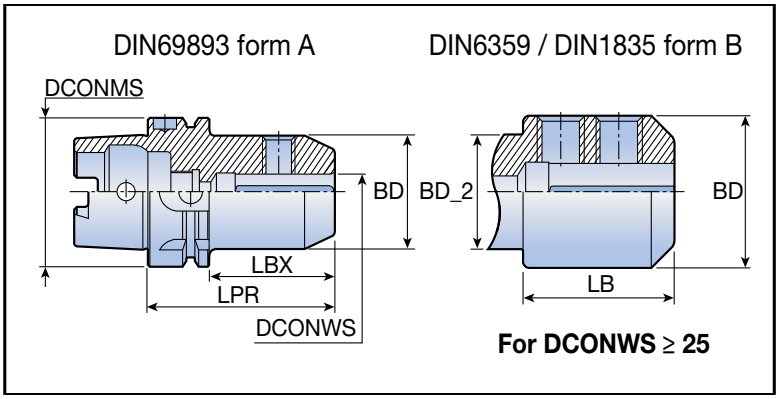

Designation		Dimension (mm)						
		DCONMS	DCONWS	BD	BD_2	LPR	LBX	LB
HSK A 63	**EM 6X100 CX**	63	6	25	-	100	74	-
	EM 6X65 CX	63	6	25	-	65	39	-
	EM 8X65 CX	63	8	28	-	65	39	-
	EM 10X65 CX	63	10	35	-	65	39	-
	EM 12X80 CX	63	12	42	-	80	54	-
	EM 16X100 CX	63	16	48	-	100	74	-
	EM 16X80 CX	63	16	48	-	80	54	-
	EM 20X80 CX	63	20	52	-	80	54	-
	EM 25X110 CX	63	25	65	52.5	110	84	68

HSK A-SRKIN-CX

CX coolant type thermal shrinking chucks

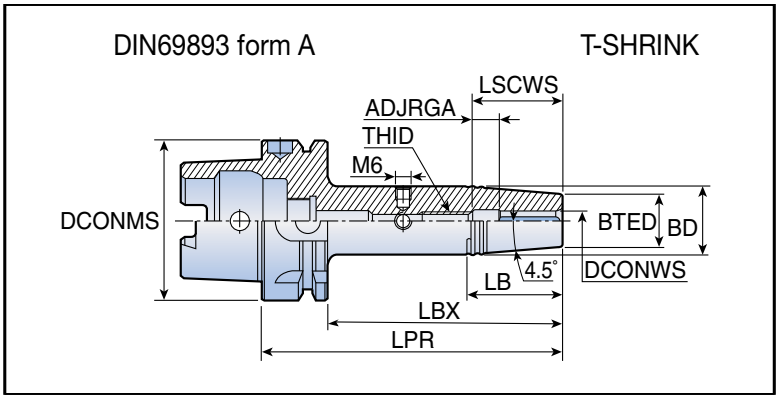

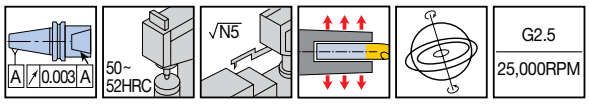

Designation		Dimension (mm)										
		DCONMS	DCONWS	BTED	BD	LPR	LBX	LB	LB_2	ADJRGA	LSCWS	THID
HSK A 63	**SRKIN 6X80 CX**	63	6	21	27	80	54	38.1	49	9	34	M5
	SRKIN 6X120 CX	63	6	21	27	120	94	38.1	89	9	34	M5
	SRKIN 8X80 CX	63	8	21	27	80	54	38.1	49	10	34	M6
	SRKIN 8X120 CX	63	8	21	27	120	94	38.1	89	10	34	M6
	SRKIN 10X85 CX	63	10	24	32	85	59	50.8	57.5	9	40	M8
	SRKIN 10X120 CX	63	10	24	32	120	94	50.8	89	9	40	M8
	SRKIN 12X90 CX	63	12	24	32	90	64	50.8	59	9	45	M10
	SRKIN 12X120 CX	63	12	24	32	120	94	50.8	89	9	45	M10
	SRKIN 14X90 CX	63	14	27	34	90	64	44.5	59	9	45	M10
	SRKIN 16X75 CX	63	16	27	34	75	49	44.5	47	7	46	M5
	SRKIN 16X95 CX	63	16	27	34	95	69	44.5	64	9	48	M12
	SRKIN 16X120 CX	63	16	27	34	120	94	44.5	89	9	48	M12
	SRKIN 18X95 CX	63	18	33	42	95	69	57.2	66	9	48	M12
	SRKIN 20X75 CX	63	20	33	41	75	49	-	47	5	46	M5
	SRKIN 20X100 CX	63	20	33	42	100	74	57.2	69	9	49	M16
	SRKIN 20X120 CX	63	20	33	42	120	94	57.2	89	9	49	M16
	SRKIN 25X85 CX	63	25	44	52.2	85	59	52.1	58.2	9	56	M5
	SRKIN 32X85 CX	63	32	44	52.2	85	59	52.1	58.2	6	56	M5
HSK A 100	**SRKIN 6X85 CX(1)**	100	6	21	27	85	56	38.1	48	10	34	M5
	SRKIN 8X85 CX(1)	100	8	21	27	85	56	38.1	48	10	34	M6
	SRKIN 10X90 CX(1)	100	10	24	32	90	61	50.8	53.9	9	40	M8
	SRKIN 12X95 CX(1)	100	12	24	32	95	66	50.8	59	9	45	M10
	SRKIN 14X95 CX(1)	100	14	27	34	95	66	44.5	58	9	45	M10
	SRKIN 16X100 CX(1)	100	16	27	34	100	71	44.5	63	9	48	M12
	SRKIN 18X100 CX(1)	100	18	33	42	100	71	57.2	67	9	48	M12
	SRKIN 20X105 CX(1)	100	20	33	42	105	76	57.2	69	9	49	M16
	SRKIN 25X115 CX(1)	100	25	44	53	115	86	57.2	81	9	56	M16
	SRKIN 32X120 CX(1)	100	32	44	53	120	91	57.2	89	9	59	M16

- Only use inductive heating device for T-SHRINK holders
- (1) Balance to G2.5 at 20,000 RPM

HSK A-SRK-CX

CX coolant type thermal shrinking chucks

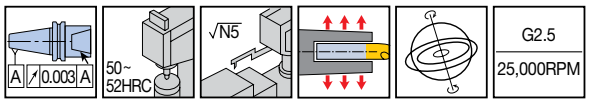

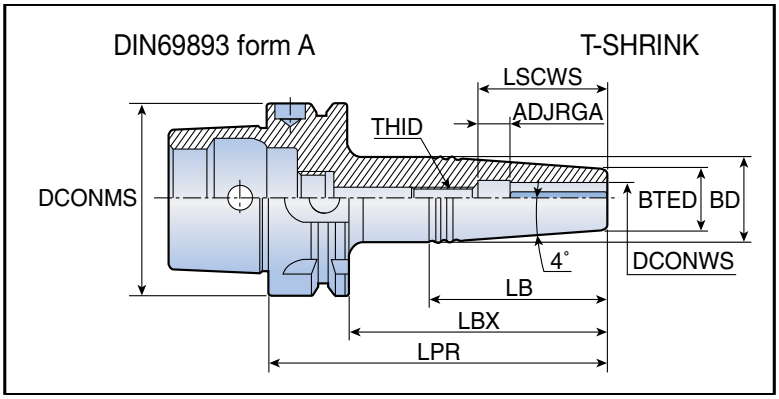

Designation		Dimension (mm)									
		DCONMS	DCONWS	BTED	BD	LPR	LBX	LB	ADJRGA	LSCWS	THID
HSK A 63	**SRK 3X50 CX**	63	3	10	17	76	50	-	-	-	-
	SRK 3X85 CX	63	3	10	21	111	85	78.7	-	-	-
	SRK 4X50 CX	63	4	10	17	76	50	-	-	-	-
	SRK 4X85 CX	63	4	10	21	111	85	78.7	-	-	-
	SRK 5X50 CX	63	5	10	17	76	50	-	-	-	-
	SRK 5X85 CX	63	5	10	21	111	85	78.7	-	-	-
	SRK 6X50 CX	63	6	11	18	76	50	-	9	27	M5
	SRK 6X85 CX	63	6	11	22	111	85	78.7	9	27	M5
	SRK 8X50 CX	63	8	14	20	76	50	42.9	10	35	M6
	SRK 8X85 CX	63	8	14	23	111	85	64.4	10	35	M6
	SRK 10X50 CX	63	10	16	23	76	50	-	10	40	M6
	SRK 10X85 CX	63	10	16	26	111	85	71.5	9	39	M8
	SRK 12X50 CX	63	12	20	27	76	50	-	10	42	M6
	SRK 12X85 CX	63	12	20	30	111	85	71.5	9	41	M10

BT-EM-CX

CX coolant type end mill holders

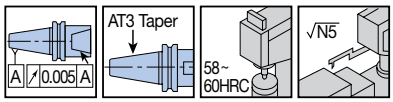

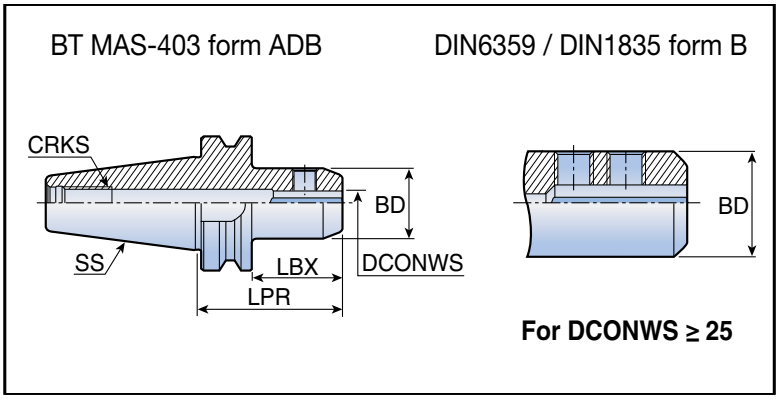

Designation		Dimension (mm)					
		SS	DCONWS	BD	LPR	LBX	CRKS
BT40	**EM 6X50 CX**	40	6	25	50	23	M16
	EM 8X50 CX	40	8	28	50	23	M16
	EM 10X63 CX	40	10	35	63	36	M16
	EM 12X63 CX	40	12	42	63	36	M16
	EM 16X63 CX	40	16	48	63	36	M16
	EM 20X63 CX	40	20	52	63	36	M16
	EM 25X45 CX	40	25	61	45	18	M16
	EM 25X90 CX	40	25	65	90	63	M16
	EM 32X100 CX	40	32	72	100	65	M16
BT50	**EM 12X80 CX**	50	12	42	80	42	M24
	EM 16X80 CX	50	16	48	80	42	M24
	EM 20X80 CX	50	20	52	80	42	M24
	EM 25X100 CX	50	25	65	100	62	M24
	EM 32X105 CX	50	32	72	105	67	M24
	EM 40X110 CX	50	40	80	110	72	M24

BT-SRKIN-CX

CX coolant type thermal shrinking chucks

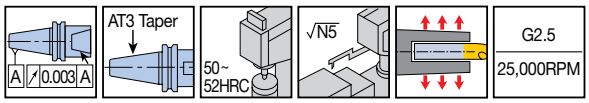

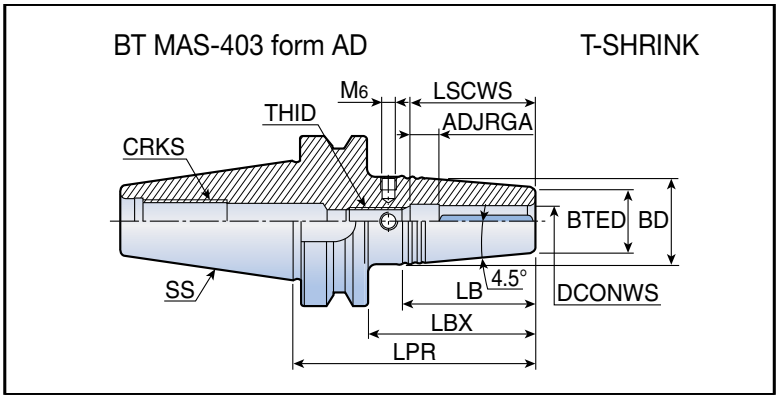

Designation		Dimension (mm)											
		SS	DCONWS	BTED	BD	LPR	LBX	LB	ADJRGA	LSCWS	CRKS	THID	Wrench
BT40	**SRKIN 6X90 CX**	40	6	21	27	90	63	38.0	10	34	M16	M5	2.5
	SRKIN 8X90 CX	40	8	21	27	90	63	38.0	10	34	M16	M6	3.0
	SRKIN 10X90 CX	40	10	24	32	90	63	50.8	9	40	M16	M8	4.0
	SRKIN 12X90 CX	40	12	24	32	90	63	50.8	9	45	M16	M10	5.0
	SRKIN 14X90 CX	40	14	27	34	90	63	44.5	9	45	M16	M10	5.0
	SRKIN 16X90 CX	40	16	27	34	90	63	44.5	9	48	M16	M12	6.0
	SRKIN 20X90 CX	40	20	33	42	90	63	57.0	9	49	M16	M16	8.0
	SRKIN 25X110 CX	40	25	44	53	110	83	57.0	9	55	M16	M16	8.0
BT50	**SRKIN 6X100 CX(1)**	50	6	21	26	100	62	32.0	10	34	M24	M5	2.5
	SRKIN 8X100 CX(1)	50	8	21	27	100	62	38.0	10	34	M24	M6	3.0
	SRKIN 10X100 CX(1)	50	10	24	32	100	62	50.8	9	40	M24	M8	4.0
	SRKIN 12X100 CX(1)	50	12	24	32	100	62	50.8	9	45	M24	M10	5.0
	SRKIN 14X100 CX(1)	50	14	27	34	100	62	44.5	9	45	M24	M10	5.0
	SRKIN 16X100 CX(1)	50	16	27	34	100	62	44.5	9	48	M24	M12	6.0
	SRKIN 20X100 CX(1)	50	20	33	42	100	62	57.0	9	49	M24	M16	8.0
	SRKIN 25X120 CX(1)	50	25	44	53	120	82	57.0	9	55	M24	M16	8.0
	SRKIN 32X120 CX(1)	50	32	44	53	120	82	57.0	9	59	M24	M16	8.0

- Only use inductive heating device for T-SHRINK holders
- (1) Balance to G2.5 at 20,000 RPM

BT-FC-SRKIN-CX

CX coolant type thermal shrinking chucks

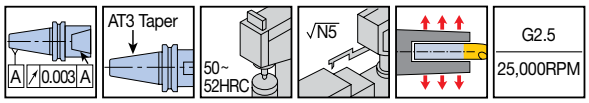

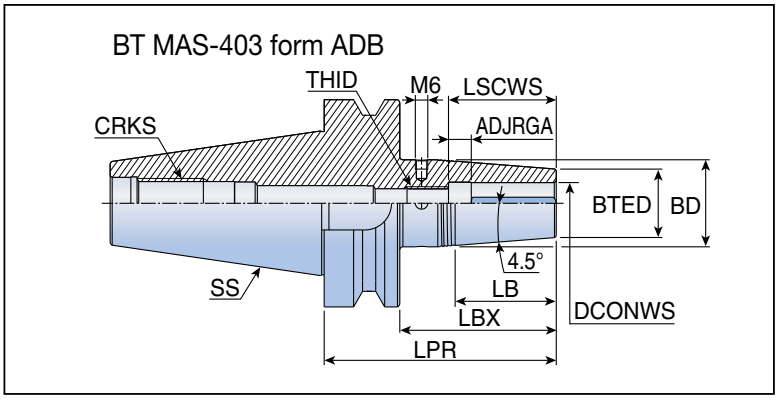

Designation		Dimension (mm)										
		SS	DCONWS	BTED	BD	LPR	LBX	LB	ADJRGA	LSCWS	CRKS	THID
BT40 FC	**SRKIN 6X90 CX**	40	6	21	27	90	64	30.1	9	34	M16	M5
	SRKIN 8X90 CX	40	8	21	27	90	64	30.1	10	34	M16	M6
	SRKIN 10X90 CX	40	10	24	32	90	64	42.8	9	40	M16	M8
	SRKIN 12X90 CX	40	12	24	32	90	64	42.8	9	45	M16	M10
	SRKIN 14X90 CX	40	14	27	34	90	64	36.5	9	45	M16	M10
	SRKIN 16X90 CX	40	16	27	34	90	64	36.5	9	48	M16	M12
	SRKIN 20X90 CX	40	20	33	42	90	64	49.2	9	49	M16	M16
	SRKIN 25X110 CX	40	25	44	53	110	84	49.2	9	55	M16	M16

▸ Only use inductive heating device for T-SHRINK holders

C-SRKIN-CX

CX coolant type thermal shrinking chucks

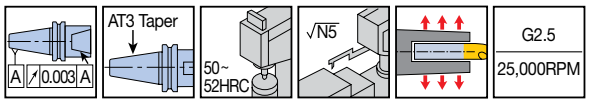

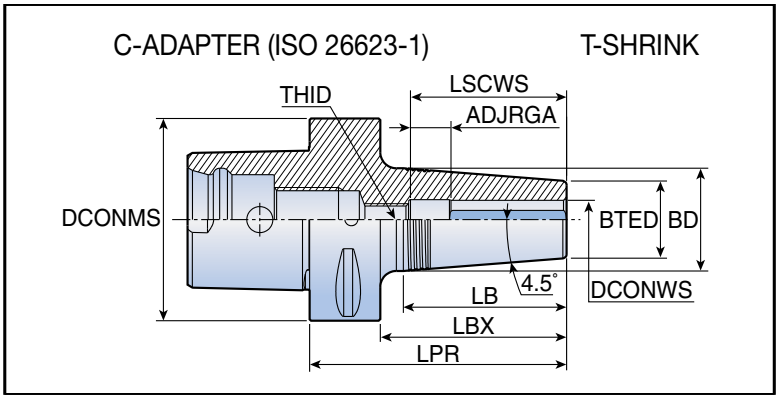

Designation		Dimension (mm)										
		DCONMS	DCONWS	BTED	BD	LPR	LBX	LB	ADJRGA	LSCWS	THID	Wrench
C6	SRKIN 6X80 CX	63	6	21	27	80	58	38.1	10	34	M5	2.5
	SRKIN 8X80 CX	63	8	21	27	80	58	38.1	10	34	M6	3.0
	SRKIN 10X80 CX	63	10	24	32	80	58	50.8	9	40	M8	4.0
	SRKIN 12X80 CX	63	12	24	32	80	58	50.8	9	45	M10	5.0
	SRKIN 14X85 CX	63	14	27	34	85	63	44.5	9	45	M10	5.0
	SRKIN 16X85 CX	63	16	27	34	85	63	44.5	9	48	M12	6.0
	SRKIN 18X85 CX	63	18	33	42	85	63	57.2	9	48	M12	6.0
	SRKIN 20X85 CX	63	20	33	42	85	63	57.2	9	49	M16	8.0
	SRKIN 25X90 CX	63	25	44	53	90	68	57.2	9	55	M16	8.0
	SRKIN 32X95 CX	63	32	44	53	95	73	57.2	9	59	M16	8.0
C8	SRKIN 6X90 CX	80	6	21	27	90	60	38.1	9	34	M5	2.5
	SRKIN 8X90 CX	80	8	21	27	90	60	38.1	10	34	M6	3.0
	SRKIN 10X90 CX	80	10	24	32	90	60	50.8	9	40	M8	4.0
	SRKIN 12X90 CX	80	12	24	32	90	60	50.8	9	45	M10	5.0
	SRKIN 12X120 CX	80	12	24	32	120	90	50.8	9	45	M10	5.0
	SRKIN 12X160 CX	80	12	24	32	160	130	50.8	9	45	M10	5.0
	SRKIN 16X95 CX	80	16	27	34	95	65	44.5	9	48	M12	6.0
	SRKIN 16X120 CX	80	16	27	34	120	90	44.5	9	48	M12	6.0
	SRKIN 16X160 CX	80	16	27	34	160	130	44.5	9	48	M12	6.0
	SRKIN 20X95 CX	80	20	33	42	95	65	57.2	9	49	M16	8.0
	SRKIN 25X100 CX	80	25	44	53	100	70	57.2	9	55	M16	8.0
	SRKIN 32X115 CX	80	32	44	53	115	85	57.2	9	59	M16	8.0

▸ Only use inductive heating device for T-SHRINK holders

ER-SRK-CX

CX coolant type T-SHRINK ER collets DIN6499

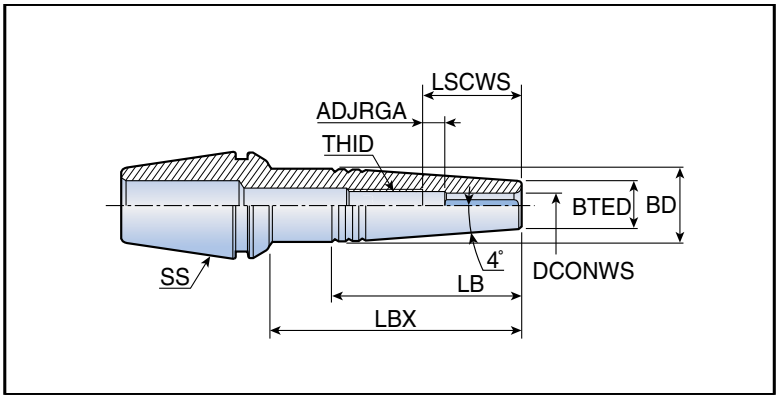

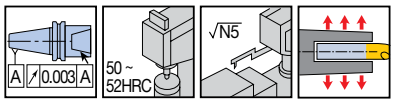

	Designation	Dimension (mm)								
		SS	DCONWS	BTED	BD	LBX	LB	ADJRGA	LSCWS	THID
ER32	**SRK 3X35 CX**	ER32	3	10	13.5	35	25.0	-	-	-
	SRK 3X60 CX	ER32	3	10	16.3	60	45.0	-	-	-
	SRK 4X35 CX	ER32	4	10	13.5	35	25.0	-	-	-
	SRK 4X60 CX	ER32	4	10	16.3	60	45.0	-	-	-
	SRK 5X35 CX	ER32	5	10	13.5	35	25.0	-	-	-
	SRK 5X60 CX	ER32	5	10	16.3	60	45.0	-	-	-
	SRK 6X35 CX	ER32	6	11	14.7	35	26.5	7	27	M5
	SRK 6X60 CX	ER32	6	11	17.3	60	45.0	7	27	M5
	SRK 8X35 CX	ER32	8	14	18.9	35	-	7	35	M6
	SRK 8X60 CX	ER32	8	14	20.4	60	45.8	7	35	M6
	SRK 10X35 CX	ER32	10	16	20.9	35	-	7	39	M8
	SRK 10X60 CX	ER32	10	16	22.4	60	45.8	7	39	M8
	SRK 12X35 CX	ER32	12	20	24.0	35	28.6	7	41	M10
	SRK 12X60 CX	ER32	12	20	24.0	60	28.6	7	41	M10